TEAR SHEET

Dot Stance 13" Rotating Pendant

Item # PB 5005MBK

Designer: Peter Bristol

O/A Height: 62"
Fixture Height: 26"
Min. Custom Height: 30"
Width: 16.25"
Canopy: 5.25" Round
Finishes: MBK, NB, PN
Lightsource: Dedicated LED
Wattage: 18w (1250lm)
Weight: 10 Pounds

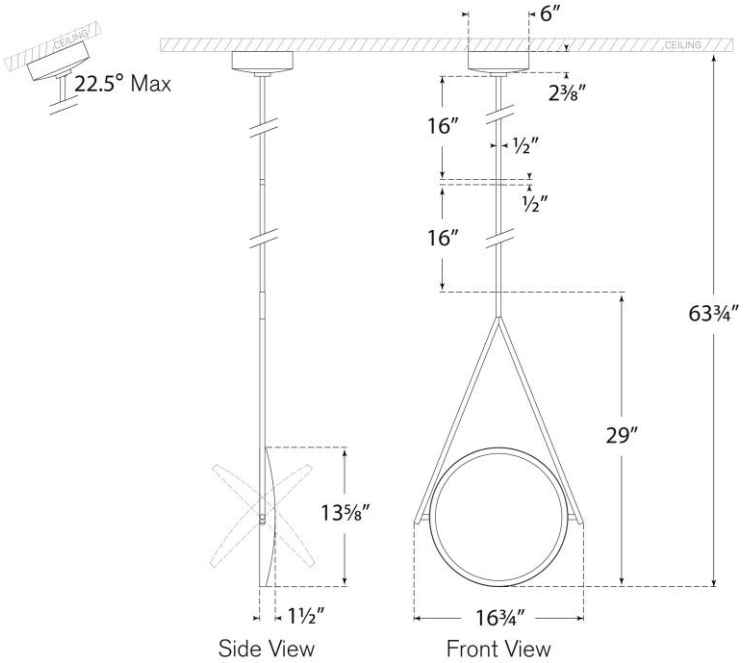

VISUAL COMFORT & CO.